RUPTURE DISKS (“BLOW-OUT” PLUGS)

Model RDEB

Assemblies designed for over-pressure protection of plastic extrusion processes.

FEATURES:

- Assembly consists of a threaded tubular body with a rupture disk soldered onto the process end.
- One piece construction
- 300 series SS body material, other materials available
- Inconel disk material standard
- Burst ratings 750 to 15,000 psig
- Burst tolerance: ± 10%
- 0% manufacturing range
- Standard assemblies in stock
- Custom assemblies available on request
- Re-disking available
- Assembly is mounted directly into the extruder equipment through a pressure port or thermocouple-well where critical pressures occur.

ORDERING:

End Configuration	☐ Hex	☐ Other _____
Disk Materials	☐ Inconel	☐ Other _____
Body Materials	☐ 300 SS	☐ Other _____

Burst Specifications _____ psig at _____°F

Quantity _____

Dimensions ☐ 1.82”
☐ 6.70”

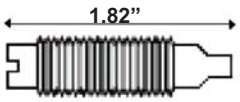

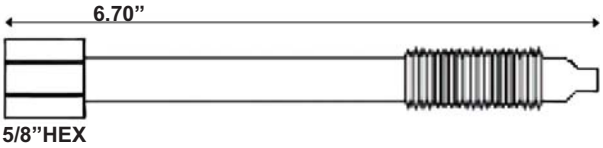

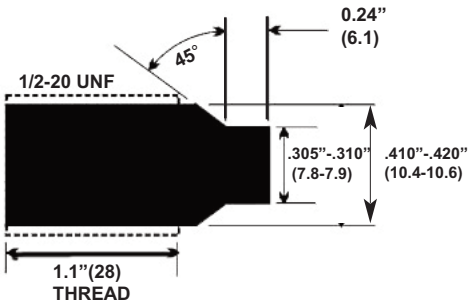

INSTALLATION:

It is generally good practice to inspect the mounting hole before installation and prevent any chance of leakage. Remove any polymer that might have built up in the hole. This can be done easily withGP:50’s Mounting Hole Cleaning Kit (Model HCKAA).

Insert the proper burst range rupture disk in the mounting hole to approximately 100-200 inch pounds of torque.

⚠ It is imperative that the Rupture Disk be intalled in a position that insures any discharge of hot polymer will not create a hazard to personnel in the area.

It is important that the rupture disk is mounted flush with the inner wall of the extrusion device. (see Fig. 1) An improperly designed device would present an area for excessive product build-up, rendering the disk ineffective. (see Fig. 2)

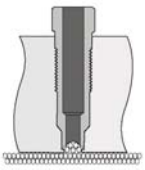
Fig. 1

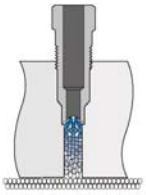
Fig. 2

A5SL-RDEB.00

2770 Long Road, Grand Island, NY 14072 USA
Tel. (716) 773-9300 Fax (716) 773-5019 E-mail:sales@gp50.com website:www.gp50.com